38230270001	D440R ST HDG FLATW M27

Brand	-
UBB Code	950356041984
UNSPSC Code	31161807
EAN Code	8715492088833
Surface treatment	Hot dip galvanized
Material	Steel

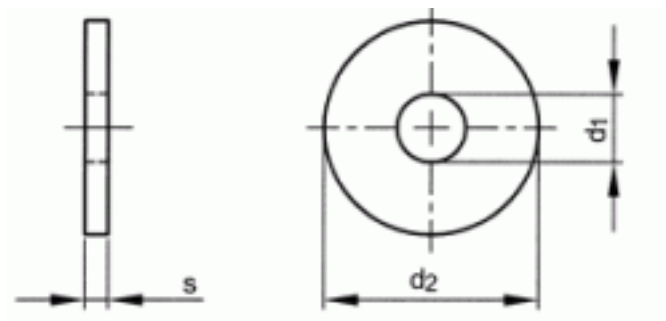

s	6
d2	98
d1	30
For nom. size	M27
Packaging (Piece)	25.0

FABORY
MASTERS IN FASTENERS

Copyright Fabory Group