12300360001	D985 |5| ZPL HX LCKNT/INS SP M36

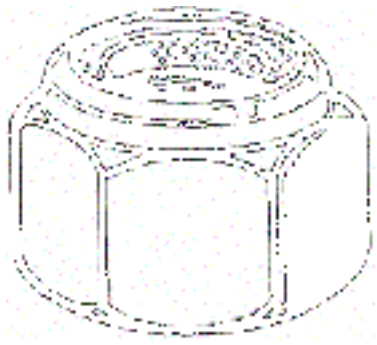

Brand	-
UBB Code	950355117249
UNSPSC Code	31161727
EAN Code	8715492576989
Driving features	hexagon
Thread	Metric thread
Class	≥|5|
Material	Steel
Surface treatment	Zinc plated

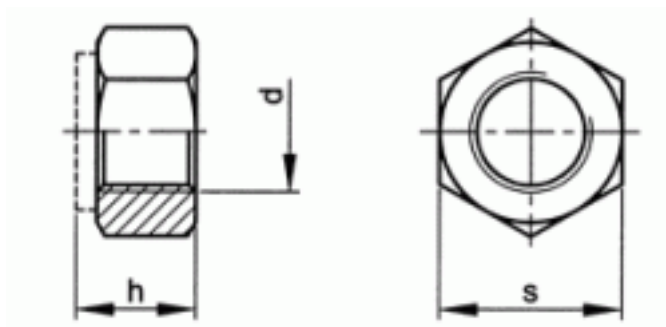

s	55
h	36
P	4
d	M36
Packaging (Piece)	5.0

FABORY
MASTERS IN FASTENERS

Copyright Fabory Group