11400140001	ST ZPL HX CONN NT 3XD M14

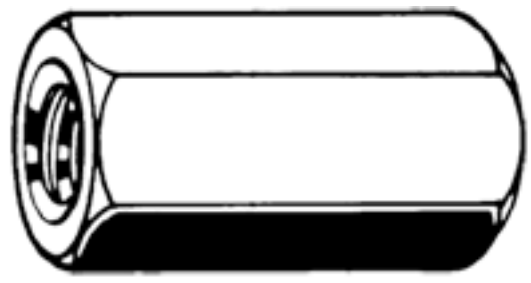

Brand	-
UBB Code	950355763133
UNSPSC Code	31161727
EAN Code	8715492572615
Driving features	hexagon
Thread	Metric thread
Material	Free-cutting steel
Surface treatment	Zinc plated

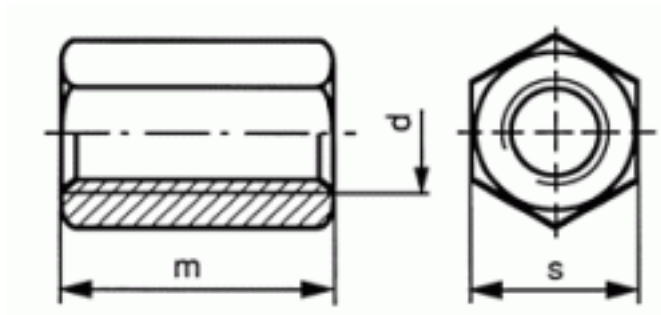

s	22
m	42
P	2
d	M14
Packaging (Piece)	25.0

Copyright Fabory Group