12320220150	D985 |5| ZPL HX LCKNT/INS MF M22X1,50

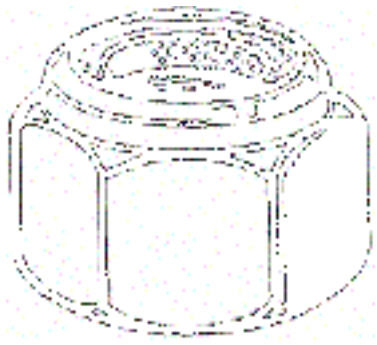

Brand	-
UBB Code	950355120375
UNSPSC Code	31161727
EAN Code	8715492577443
Head shape	hexagon head
Thread	Metric fine thread
Class	≥|5|
Material	Steel
Surface treatment	Zinc plated
Driving features	hexagon

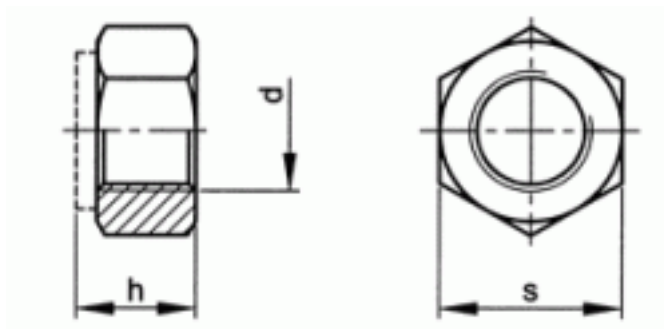

s	32
h	22
P	1,50
d	M22
Packaging (Piece)	25.0

FABORY
MASTERS IN FASTENERS

Copyright Fabory Group