11360120001	D439B CL.04 ZPL HX NT M12

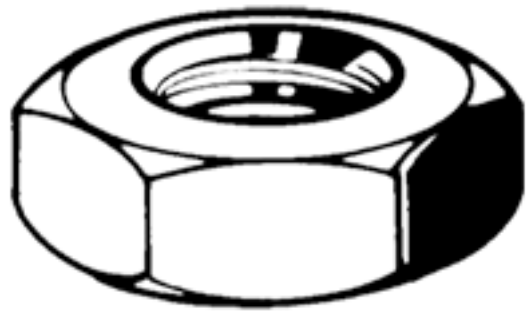

Brand	-
UBB Code	950355090412
UNSPSC Code	31161727
EAN Code	8715492571106
Driving features	hexagon
Thread	Metric thread
Class	04
Material	Steel
Surface treatment	Zinc plated

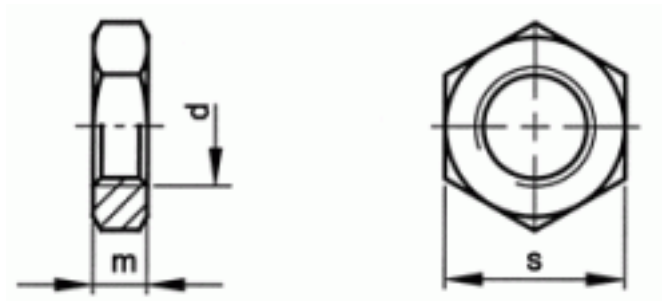

s	19
m	6
P	1,75
d	M12
Packaging (Piece)	100.0

FABORY
MASTERS IN FASTENERS

Copyright Fabory Group