55810060001	STNL A4 WING NT LIGHT (AM) M6

Brand	-
UBB Code	950355603099
UNSPSC Code	31161717
EAN Code	8715492353801
Driving features	wing
Material technical	A4
Material	Stainless steel
Thread	Metric thread

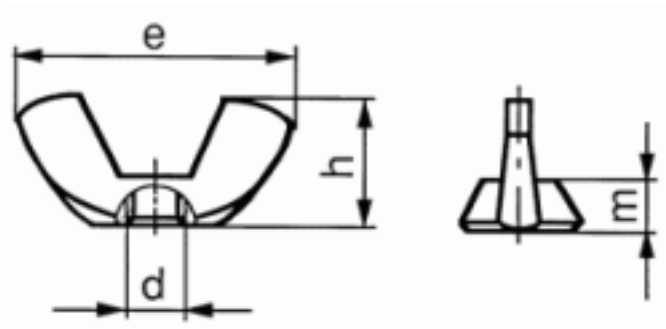

h ≈	12,9
e ≈	26,8
m ≈	4,9
P	1
d	M6
Packaging (Piece)	50.0

FABORY
MASTERS IN FASTENERS

Copyright Fabory Group