Areaflood Pro 2

96635874 AFP2 S 36L70-740 A4 CL2 GY

LED 76W AFP36L70-740A4_N | CB | ISO 9223 C5 | UK CA | IP66 | IK08 | CE | 0,5m

Areaflood Pro 2

A compact, lightweight, general purpose LED area floodlight. With small body. LED converter driving 36 LEDs at 700mA with Asymmetrical 40° light distribution. IP66, IK08, Class II electrical. Body: Die-cast aluminium (EN AC-44300), Light grey 150 sanded textured (close to RAL9006). Enclosure: 4mm thick toughened glass. Reversable mounting stirrup supplied, optional spigot adaptors available separately for post top mounting. Complete with 4000K LED.

Integrated 6kV surge protection included as standard, with higher 10kV protection when selected (designated by 'SP' in the description).

Dimensions: 429 x 349 x 99 mm
Luminaire input power: 76 W
Luminaire luminous flux: 12161 lm
Luminaire efficacy: 160 lm/W
weight: 7.07 kg
Scx: 0.052 m²



TLG_AFP2_F_S_1.jpg

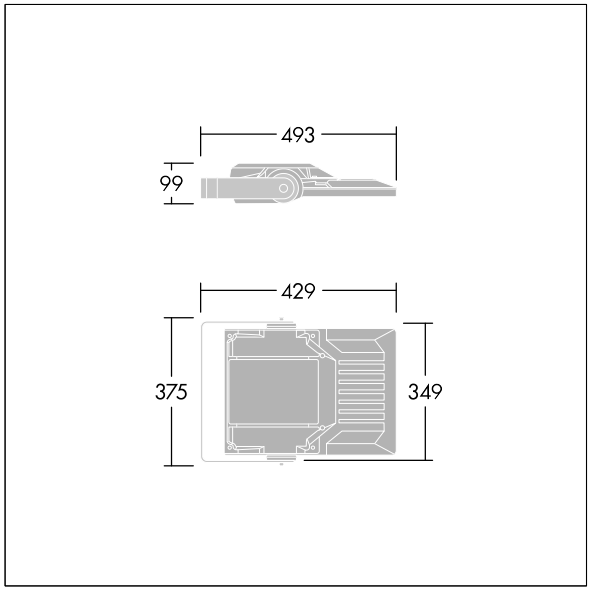

TLG_AFP2_M_S.wmf

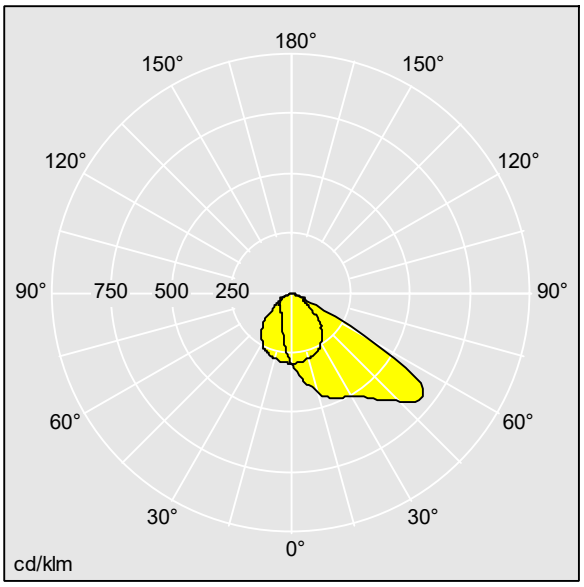

TL_AFP36L70A4740.ldt

Lamp position: STD - standard
Light Source: LED
Luminaire luminous flux*: 12161 lm
Luminaire efficacy*: 160 lm/W
Colour Rendering Index min.: 70
LOR: 1,00 ULOR: 0,00 DLOR: 1,00

Ballast: 1 x 87500825 LCO 90/200-1050/165 NF C ADV3
Correlated colour temperature*: 4000 Kelvin
Chromaticity tolerance (initial MacAdam): 5
Rated median useful life*:
L95 100000 h at 25 °C
Luminaire input power*: 76 W Power factor = 0.95

This product contains a light source of energy efficiency class E.

All values marked with an * are rated values. Thorn uses tried and tested components from leading suppliers, however there may be isolated instances of technology-related failures of individual LEDs during the rated product lifetime. International standards set the tolerance in initial flux and connected load at ±10%. Unless stated otherwise, the values apply to an ambient temperature of 25°C.Risk group

Thorn Lighting is constantly developing and improving its products. The right is reserved to change specifications without prior notification or public announcement.
© Thorn Lighting

Areaflood Pro 2

96635874 AFP2 S 36L70-740 A4 CL2 GY

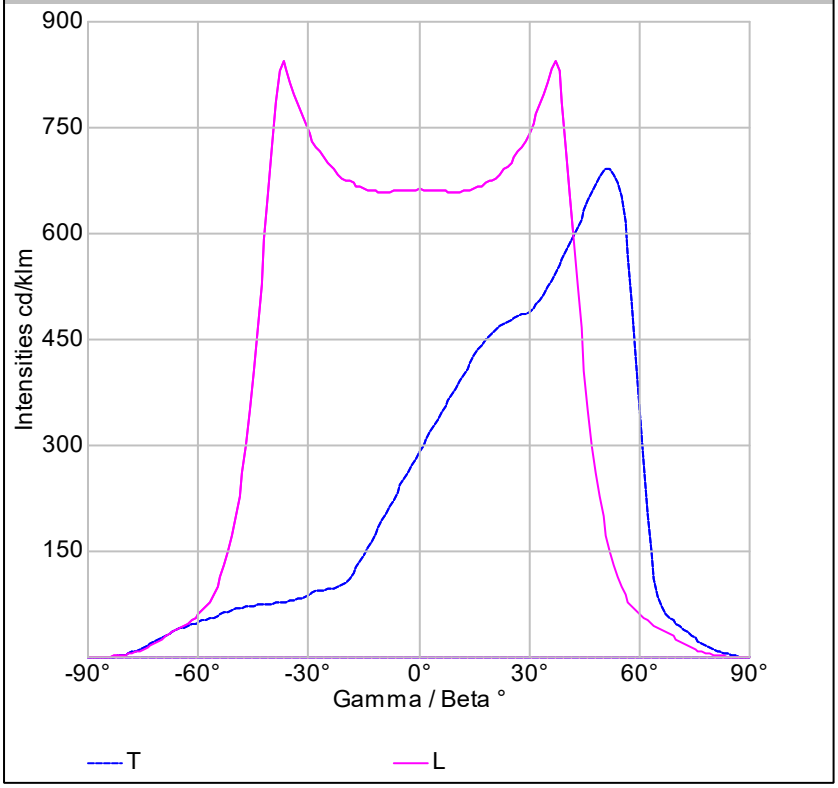

Luminaire design attitude

Tilt: α = 0.0 °

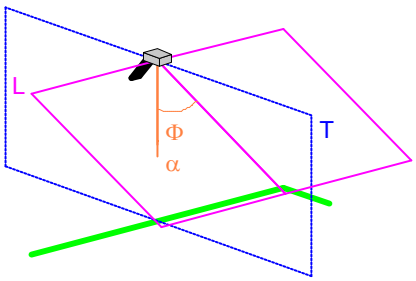

Measurement	AFP36L70A4740G38
Catalogue number	AFP S 36L70-740 A4
Lamps	1 x LEDs
Lamp adjustment	
IP	

Maximum intensity

Imax	838 cd/klm
Φ	57 °

Beam divergence

at 50% of Imax	
Longitudinal	2 x 28.5 °
Transverse:	14.2 ° / 59.1 °
at 10% of Imax	
Longitudinal	2 x 50.4 °
Transverse:	-32.4 ° / 65.1 °

Light Output Ratio

Luminaire design attitude	0.0 °
LOR	100.00
ULOR	0.00
DLOR	100.00

Upward light ratio

0% for a tilt =	1% for a tilt = 20°
3% for a tilt = 28°	5% for a tilt = 31°
10% for a tilt = 35°	15% for a tilt = 39°
20% for a tilt = 41°	25% for a tilt = 44°

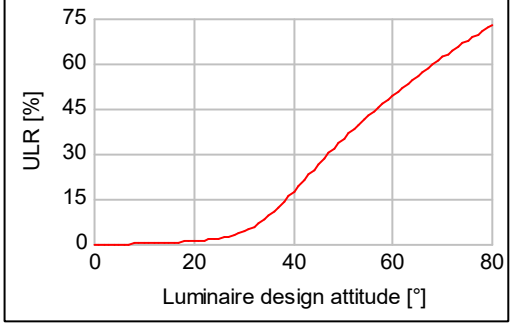

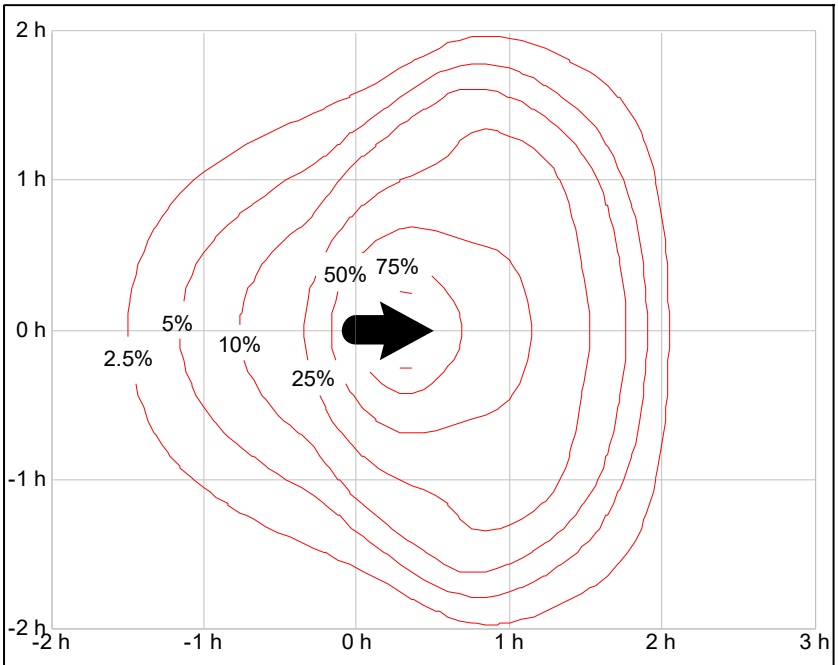

$$E\ (lux) = \frac{Emax \times E\% \times F}{h^2 \times 1000}$$

Emax = 384.0 / m / klm
luminous flux for the chosen lamp (lm)
Mounting height (m)

Glare restriction Obtrusive light

Luminous intensity class G6

γ	Meas. Data Imax in cd/klm	Specified in EN 13201-2
70 °	104	350
80 °	21	100
90 °	0	0
>90 °	0	0

Photometric data file: TL_AFP36L70A4740.ldt

Thorn Lighting is constantly developing and improving its products. The right is reserved to change specifications without prior notification or public announcement.
© Thorn Lighting