The Light Group

SLC Developed by The Light Group

Datasheet | 3234543



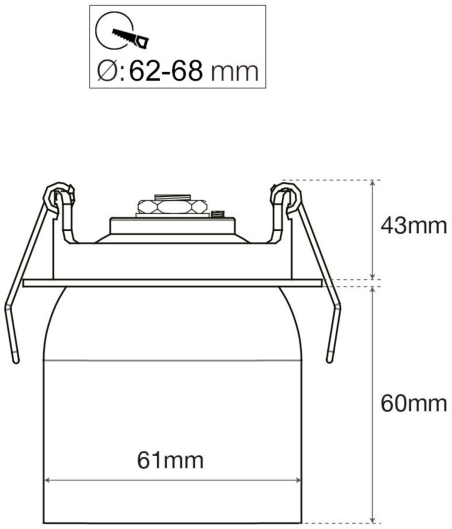

SLC Cup Ø62-68 mm Black 649lm 2700K Ra>90 Trailing edge IP20 36°

Elegant insulation-safe downlight designed in Norway. With tilt and rotation for flexible lighting, fits cut-outs 62–68 mm.

Electrical

Input	220-240V 50/60Hz
Rated power	10 W
Current out	225 mA
Control type	Trailing edge
Dimming output	Trailing edge
MAX. qty on 16A Circuit Breaker (Type C)	118
Connection	L`L`N`N quick connection
Expected lifetime (25°C)	100 000 hours
Light reduction (25°C)	L80B20
Operating temperature (Ta)	–10°C - +45°C
Insulation class	Class II

Light technic

Luminous flux	649 lm
Efficacy	65 lm/W
Colour temperature	2700K
Colour rendering (CRI/Ra)	Ra>90
MacAdam (SDCM)	3
Beam angle fixed	36 °
Dimmable	Yes
Glare (UGR)	UGR<24
Light distribution	Symmetrical
Optics/Diffuser	Reflector

Mechanical

Installation Type	Recessed
Can be installed directly into the insulation	Yes
Material, main	Aluminium
Material, optics	Plastic
Tilt	40 Degrees (angle)
Rotation	350 °
IP rating	IP20
Colour	Black

Dimensions

Cut-out	Ø62-68 mm
Height	93 mm
Width	78 mm
Length	61 mm
Product net weight	350 g
Diameter	78 mm

The Light Group GmbH
Am Schafbrinke 62 | 30519 Hannover | Germany
www.thelightgroup.de

The Light Group AS
Mjåvannsvegen 175 | 4628 Kristiansand | Norway
www.tlg.no