EDDA.



COMPACT AND DISTINCTIVE.

If you are a fan of compact luminaires, the Edda spotlight is perfect for you. The design of this adjustable track spot is really distinctive, with the incorporated driver track adapter. You can choose from three sizes, a standard or high-effiency version, and a wide range of light colours and accessories, which makes Edda popular in shops, showrooms and hospitality establishments.

EDDA S.



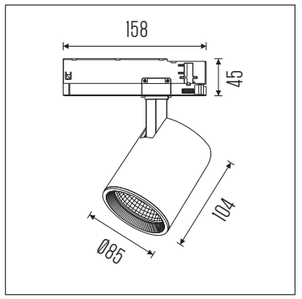



Adjustability	:	350° rotational and 90° tiltable	Optic	:	Facet Anodized Aluminum Reflector 15°, 24°, 45°, 55°
CCT [K]	:	2700K - 5700K			
CRI [Ra]	:	max. [RA] >98	Mains Voltage [VAc]	:	220-240V / 50-60Hz
Chromaticity Tolerance	:	3	Ambient Temperature [°C]	:	35°C
Luminous Flux [lm]	:	max. 2500lm	Ingress Protection [IP]	:	IP20
System Power [W]	:	max. 18.5W	Net Weight [kg]	:	0.65kg
System Efficiency [lm/W]	:	max. 130lm/W	Warranty [Y]	:	5 years
Electrical Safety Class	:	Class II			

Go to full specs

EDDA S HE.



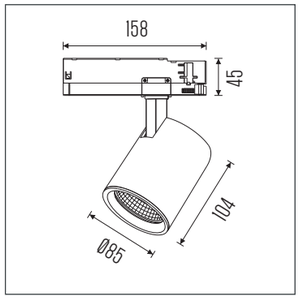

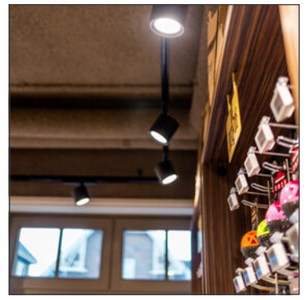

Adjustability	:	350° rotational and 90° tiltable	Optic	:	Facet Metalized Reflector 15°, 25°, 40°, 65°, 25° x 45°, 30° x 50°
CCT [K]	:	2700K, 3000K, 3500K, 4000K, 3000K PW, 3500K PW, 4000K PW			
CRI [Ra]	:	max. [RA] >98	Mains Voltage [VAc]	:	220-240V / 50-60Hz
Chromaticity Tolerance	:	2	Ambient Temperature [°C]	:	35°C
Luminous Flux [lm]	:	max. 2700lm	Ingress Protection [IP]	:	IP20
System Power [W]	:	max. 19W	Net Weight [kg]	:	0.65kg
System Efficiency [lm/W]	:	max. 150lm/W	Warranty [Y]	:	5 years
Electrical Safety Class	:	Class II			

Go to full specs

EDDA M.



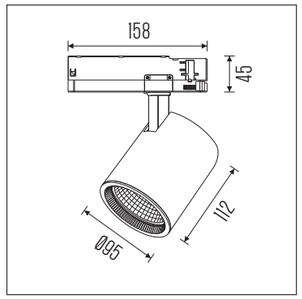





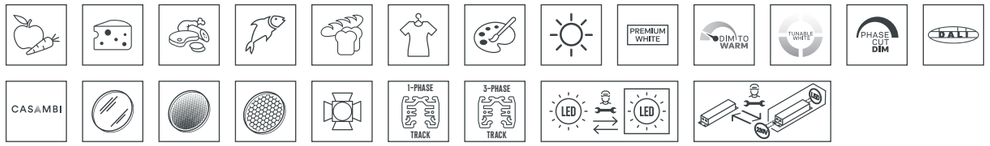

Adjustability	:	350° rotational and 90° tiltable	Optic	:	Facet Anodized Aluminum Reflector 15°, 30°, 45°, 55°
CCT [K]	:	2700K - 5700K			
CRI [Ra]	:	max. [RA] >98	Mains Voltage [VAc]	:	220-240V / 50-60Hz
Chromaticity Tolerance	:	3	Ambient Temperature [°C]	:	35°C
Luminous Flux [lm]	:	max. 3500lm	Ingress Protection [IP]	:	IP20
System Power [W]	:	max. 30W	Net Weight [kg]	:	0.85kg
System Efficiency [lm/W]	:	max. 130lm/W	Warranty [Y]	:	5 years
Electrical Safety Class	:	Class II			

Go to full specs

EDDA M HE.



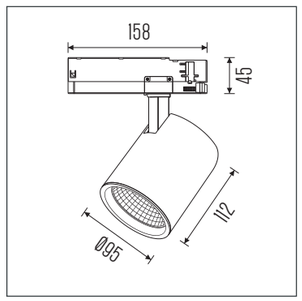





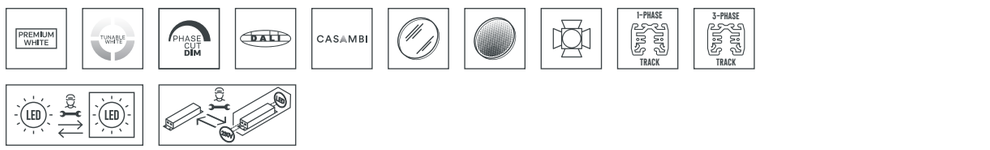

Adjustability	:	350° rotational and 90° tiltable	Optic	:	Facet Metalized Reflector 15°, 25°, 45°, 60°
CCT [K]	:	2700K, 3000K, 3500K, 4000K, 3000K PW, 3500K PW, 4500K PW	Mains Voltage [VAc]	:	220-240V / 50-60Hz
CRI [Ra]	:	max. [RA] >98	Ambient Temperature [°C]	:	35°C
Chromaticity Tolerance	:	2	Ingress Protection [IP]	:	IP20
Luminous Flux [lm]	:	max. 4000lm	Net Weight [kg]	:	0.85kg
System Power [W]	:	max. 31W	Warranty [Y]	:	5 years
System Efficiency [lm/W]	:	max. 150lm/W			
Electrical Safety Class	:	Class II			

Go to full specs

EDDA L.



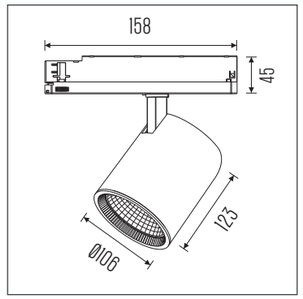

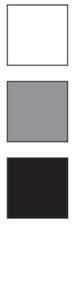



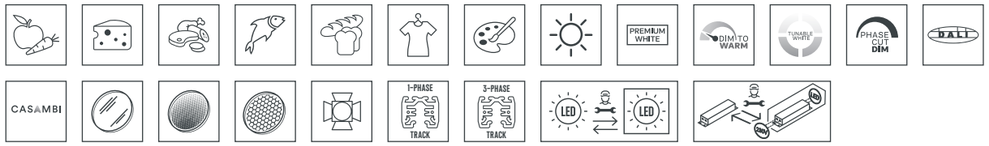

Adjustability	:	350° rotational and 90° tiltable	Optic	:	Facet Anodized Aluminum Reflector 15°, 30°, 45°, 60°
CCT [K]	:	2700K - 5700K			
CRI [Ra]	:	max. (RA) >98	Mains Voltage [VAc]	:	220-240V / 50-60Hz
Chromaticity Tolerance	:	3	Ambient Temperature [°C]	:	35°C
Luminous Flux [lm]	:	max. 4500lm	Ingress Protection [IP]	:	IP20
System Power [W]	:	max. 38.5W	Net Weight [kg]	:	1.00kg
System Efficiency [lm/W]	:	max. 135lm/W	Warranty [Y]	:	5 years
Electrical Safety Class	:	Class II			

Go to full specs

EDDA L HE.



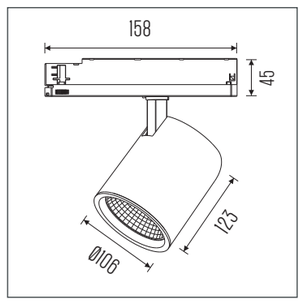







Adjustability	:	350° rotational and 90° tiltable	Optic	:	Facet Metalized Reflector 20°, 30°, 40°, 60°
CCT [K]	:	2700K, 3000K, 3500K, 4000K, 3000K PW, 3500K PW, 4000K PW	Mains Voltage [VAc]	:	220-240V / 50-60Hz
CRI [Ra]	:	max. [RA] >98	Ambient Temperature [°C]	:	35°C
Chromaticity Tolerance	:	2	Ingress Protection [IP]	:	IP20
Luminous Flux [lm]	:	max. 5200lm	Net Weight [kg]	:	1.00kg
System Power [W]	:	max. 40W	Warranty [Y]	:	5 years
System Efficiency [lm/W]	:	max. 150lm/W			
Electrical Safety Class	:	Class II			

Go to full specs